Diritti riservati All rights reserved

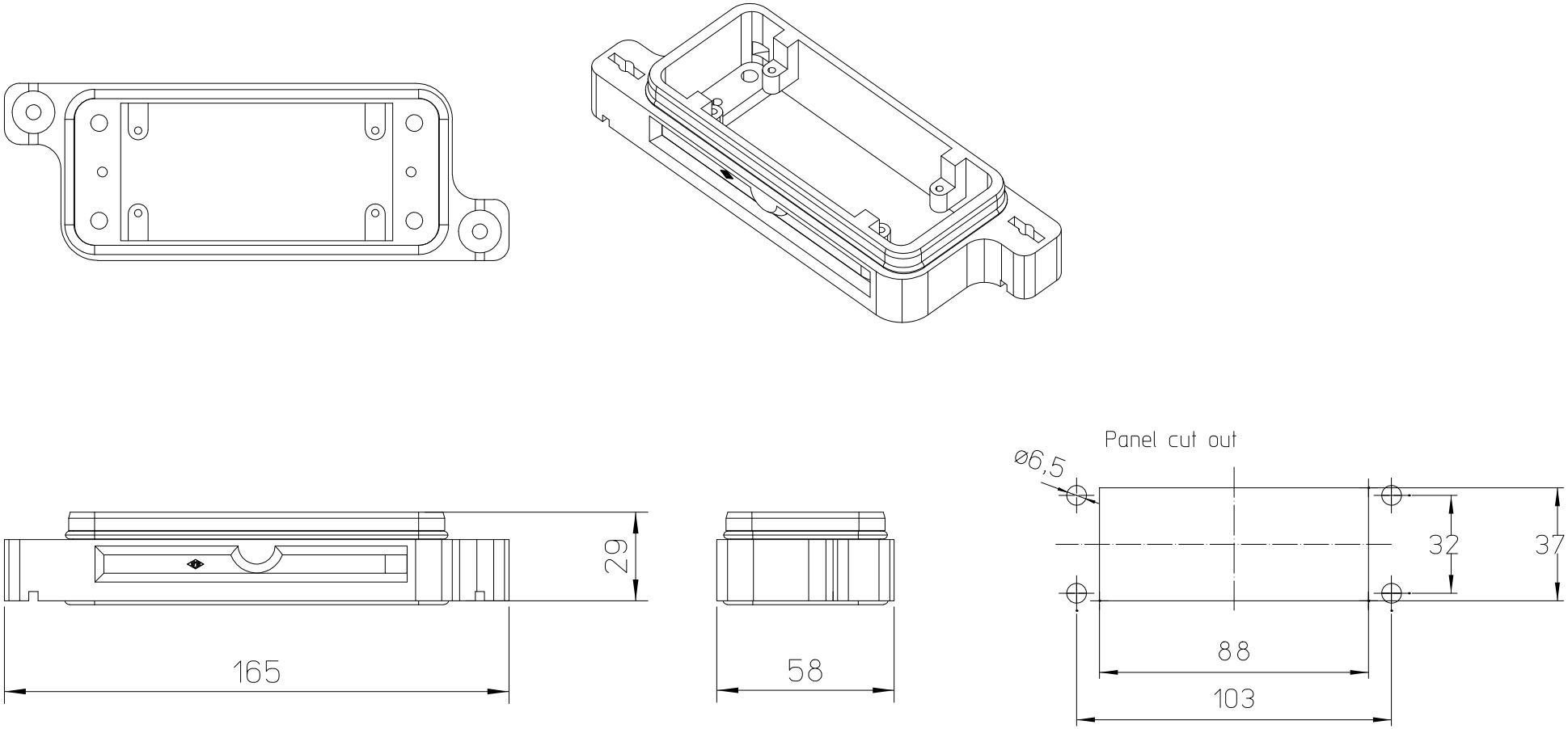

dimensions in mm	CGIE 16	Scale
Date 14/03/17	Bulkhead housing, with screw fixing - E-XTREME	1:2
Sign. C. Mainini		